ROOF BOWS
for OPEN-TOP 20' & 40'
ISO CONTAINERS

MODEL 3401-6354

WELDED ENDS

O.D. 1-5/8" / Ø42 MM TUBING
x 1/8" / 3.2 MM WALL THICKNESS

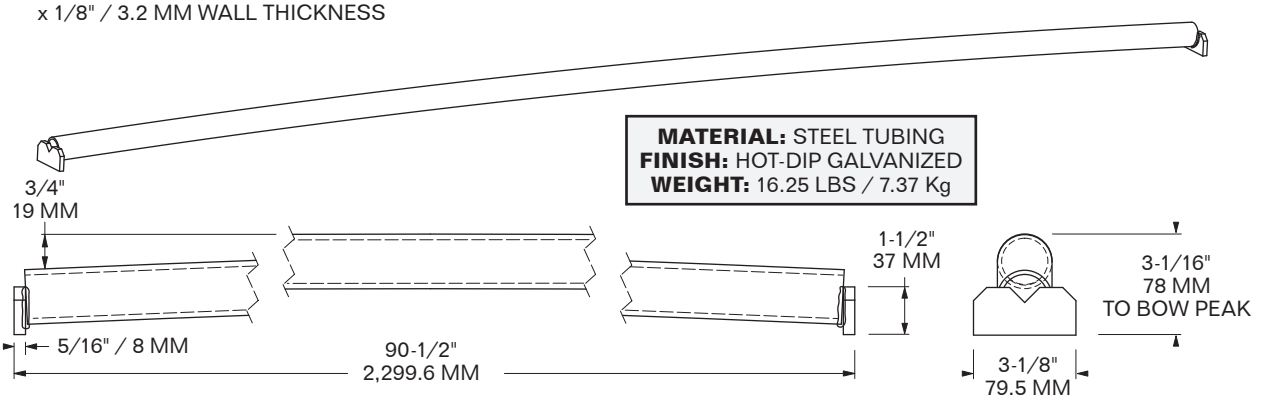

MATERIAL: STEEL TUBING
FINISH: HOT-DIP GALVANIZED
WEIGHT: 16.25 LBS / 7.37 Kg

MODEL 3401-6355

PRESSED ENDS

O.D. 1-3/8" / Ø35 MM TUBING
x 1/8" / 3.2 MM WALL THICKNESS

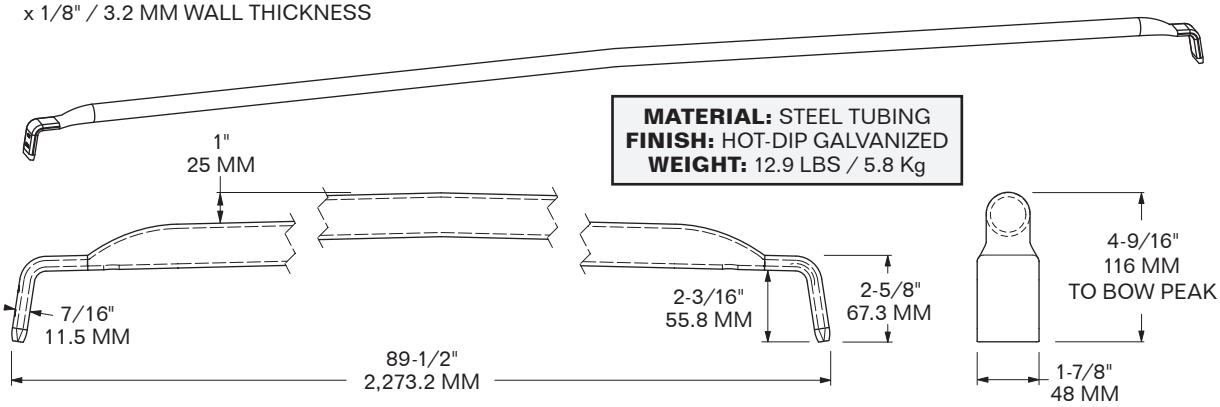

MATERIAL: STEEL TUBING
FINISH: HOT-DIP GALVANIZED
WEIGHT: 12.9 LBS / 5.8 Kg

TARPS AVAILABLE

PLEASE CALL FOR SPECIFICATIONS

BUFFERS USA INC ®

"The Intermodal Hardware Specialists"

904-696-0010

E-mail: sales@buffersusa.com